83-4

INSTALLATION INSTRUCTIONS NHN PIVOT CLOSER
MODEL NO. PDC-103W / PDC103W-S

NHN Closing Solutions

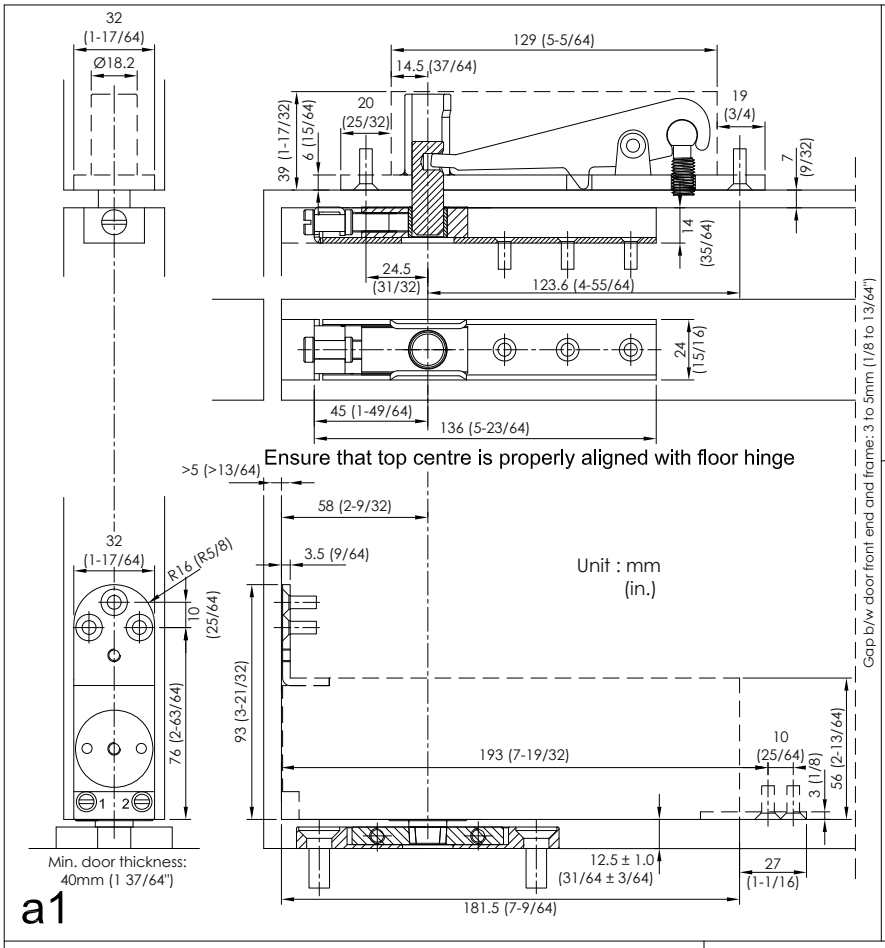

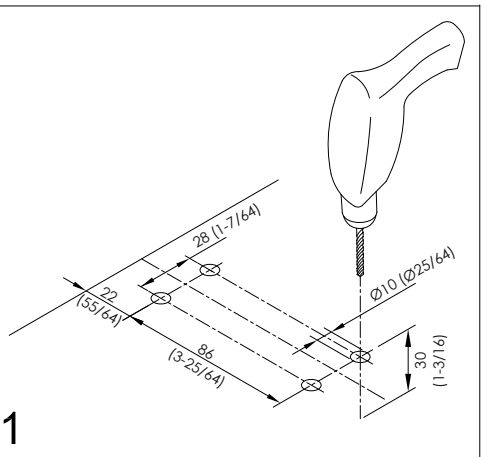

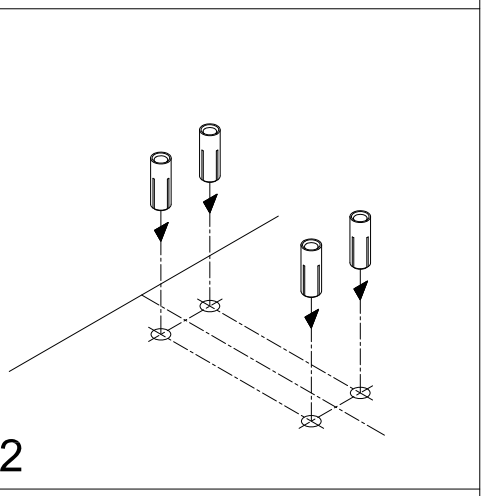

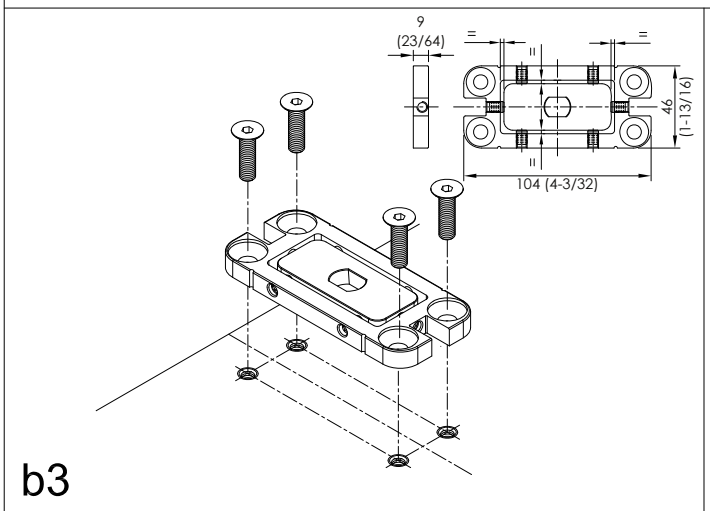

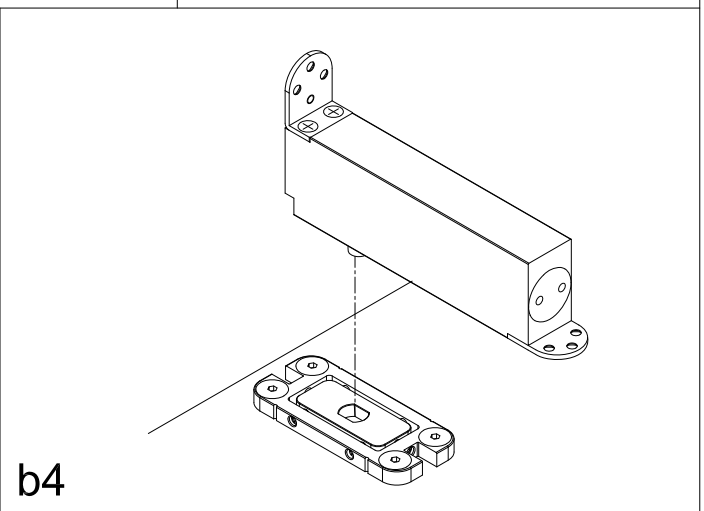

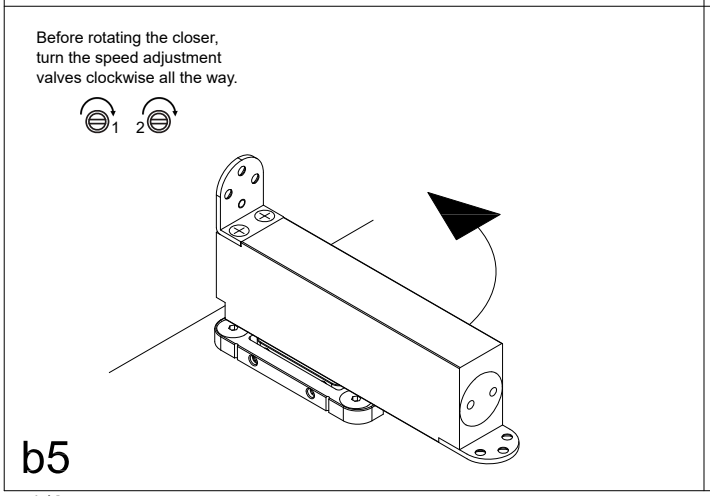

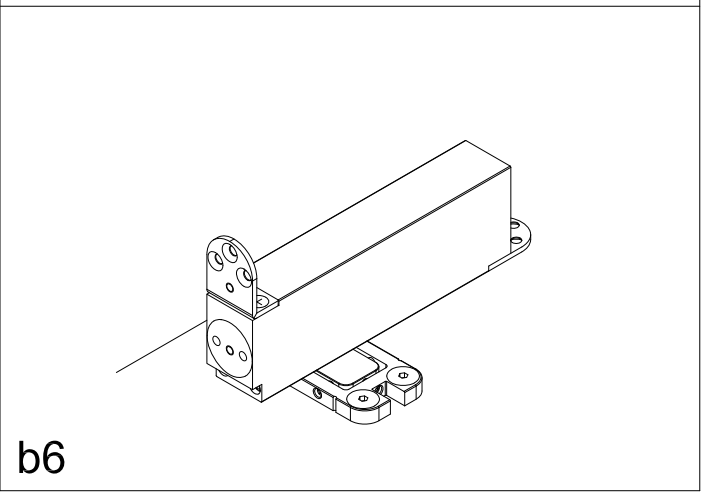

E. & O. E. ©Kenwa, Osaka-Japan. 2108A-II-PDC103W(S)

NHN Closing Solutions

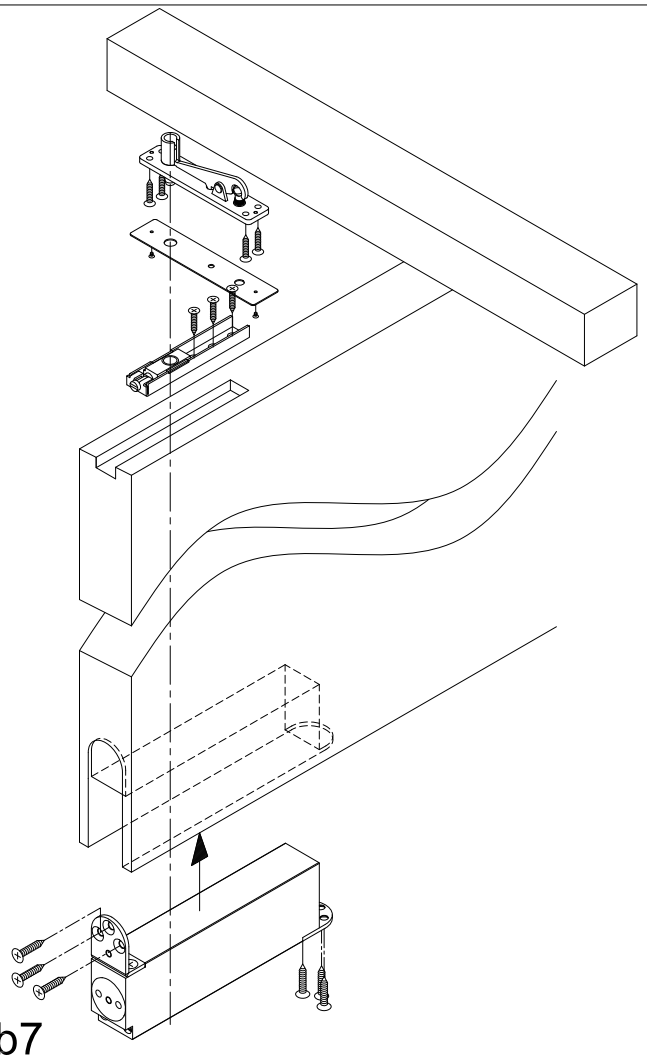

b7

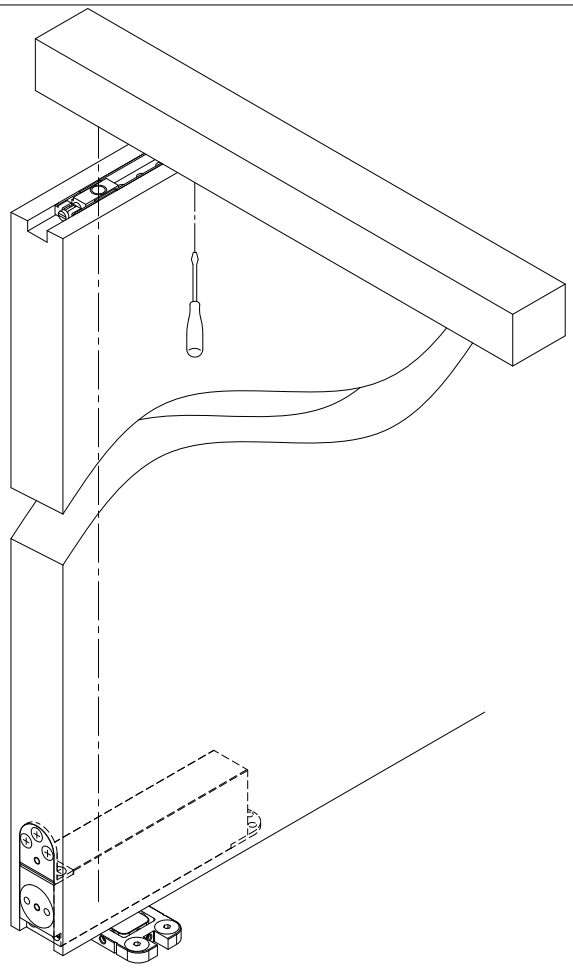

b8

Door adjustment

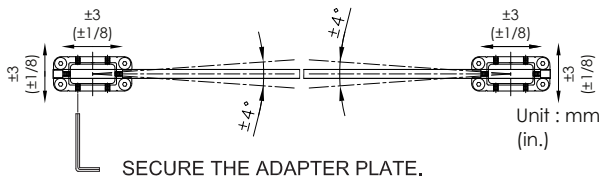

SECURE THE ADAPTER PLATE.
Tighten all 6 grub screws with the allen key firmly when the adapter plate is in its final and correct position.

b9

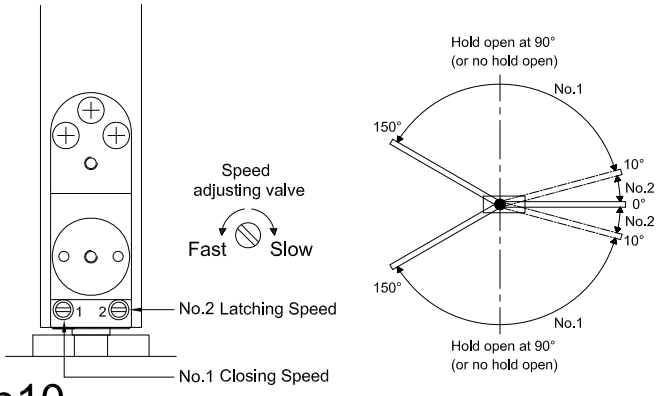

b10

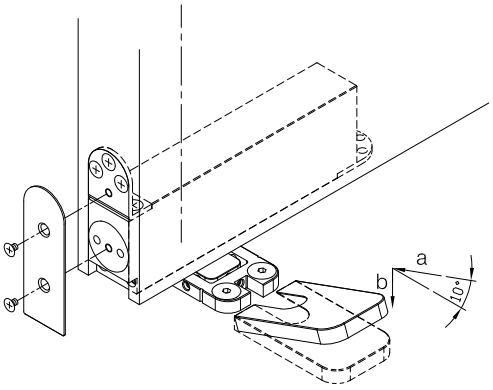

b11

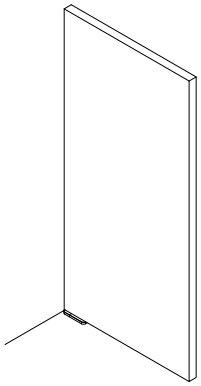

b12

E. & O. E. ©Kenwa, Osaka-Japan. 2108A-II-PDC103W(S)